October 1, 2018
Lit. No. 75370, Rev. 02

Hopper and Drive Components

Model TS-300-1 & TS-300-EG-1
Low-Profile Tailgate Spreader

Parts List

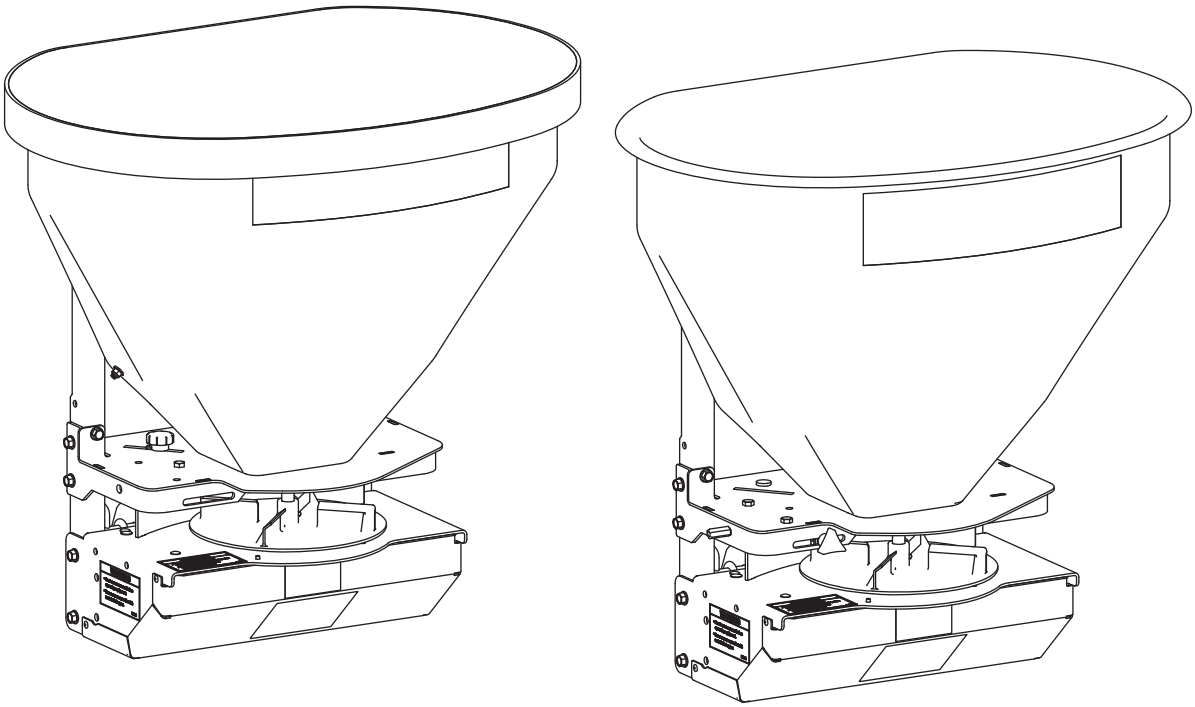

This manual is for TurfEx® TS-300-1 & TS-300-EG-1 tailgate spreaders with serial numbers beginning with 170109 and higher.

A DIVISION OF DOUGLAS DYNAMICS, LLC

TS-300-1 HOPPER COMPONENTS

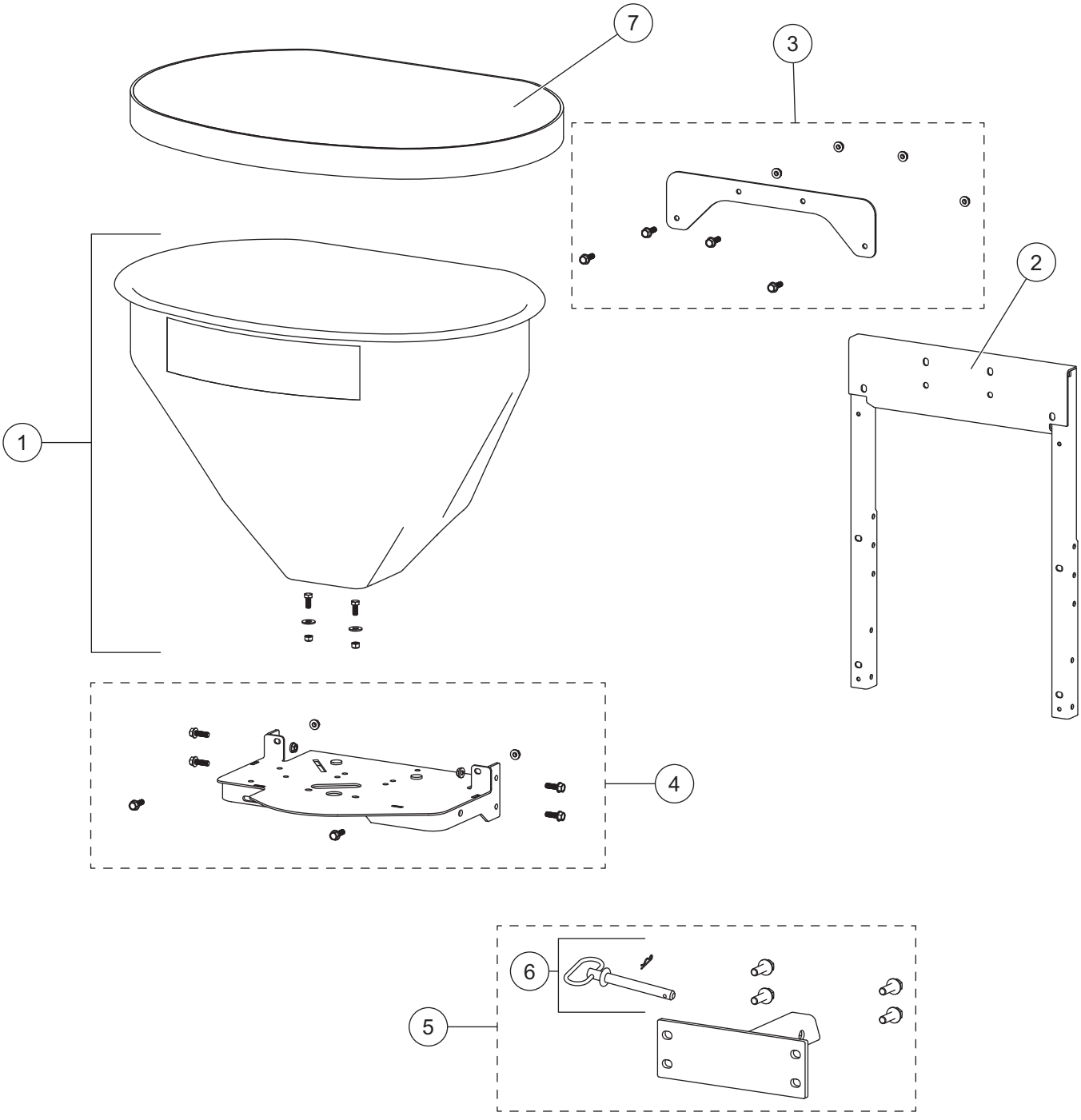

TS-300-1 Low-Profile Tailgate Spreader Hopper Components							
Item	**Part**	**Qty**	**Description**	**Item**	**Part**	**Qty**	**Description**
1	75406	1	Hopper Kit, Yellow	5	75619	1	Receiver Kit
2	75572	1	Hopper Frame	6	75620	1	Hitch Pin Kit
3	75570	1	Hopper Support Kit	7	WSC-020	1	Weather Cover
4	75405	1	Hopper Support Frame Kit				
Item 1			**75406 Hopper Kit, Yellow**				
		1	Hopper			2	5/16 Flat Washer SS
		2	5/16-18 x 3/4 Hex Cap Screw SS			2	5/16 Locknut SS
Item 3			**75570 Hopper Support Kit**				
		1	Backing Plate			4	5/16-18 Serrated Flange Nut
		4	5/16-18 x 1 Serrated Flange Hex Cap Screw SS				
Item 4			**75405 Hopper Support Frame Kit**				
		1	Hopper Support			6	5/16-18 Serrated Flange Nut
		6	5/16-18 x 1 Serrated Hex Cap Screw				
Item 5			**75619 Receiver Kit**				
		1	2" Receiver Utility Hitch			4	1/2-13 x 1-1/2 Hex Cap Screw G5
6	75620	1	5/8 x 5-1/2 Hitch Pin w/Hairpin Cotter				
Item 7			**WSC-020 Weather Cover**				
		1	Weather Cover				
SS = Stainless Steel						G = Grade	

TS-300-EG-1 HOPPER COMPONENTS

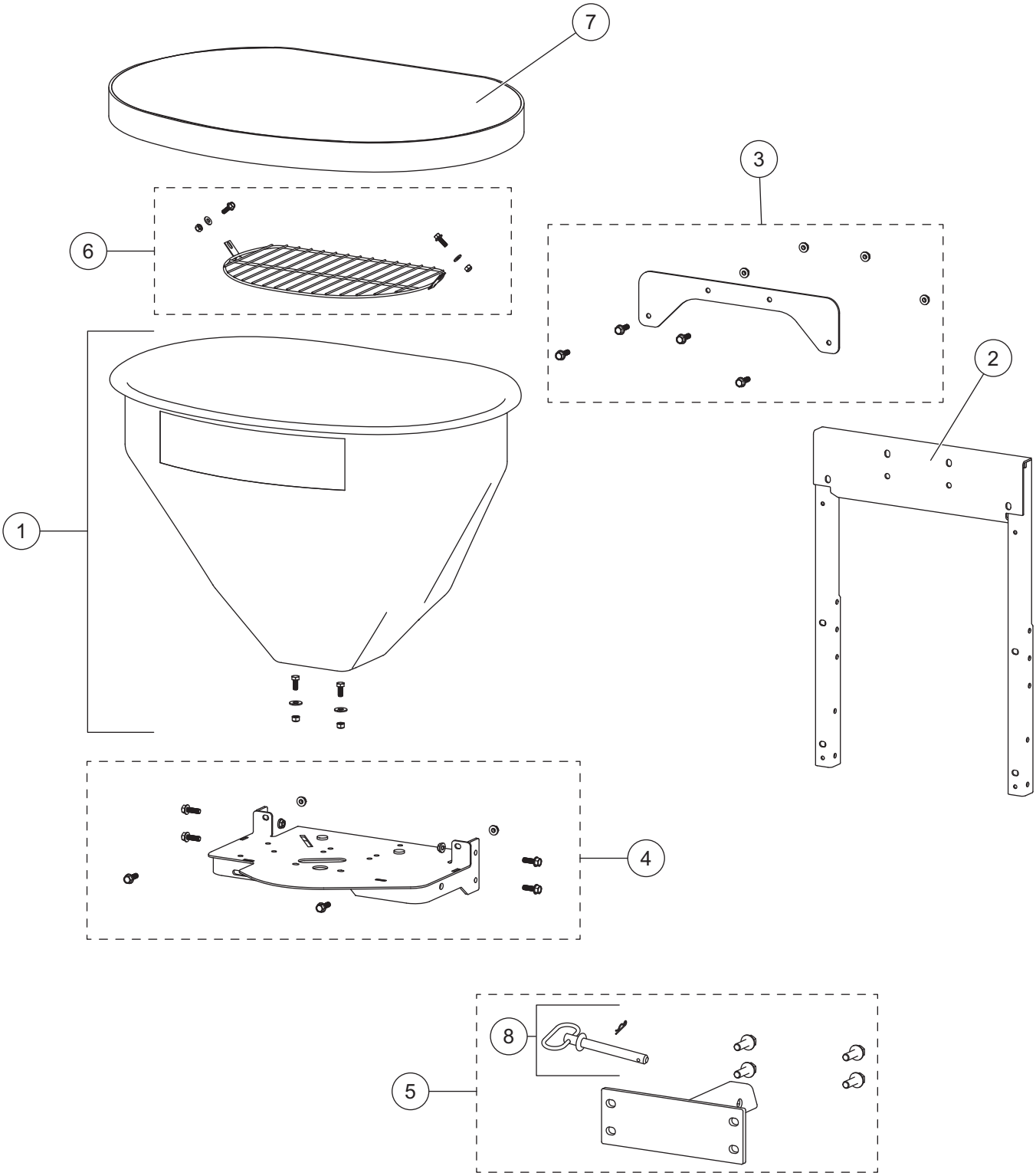

TS-300-EG-1 Low-Profile Tailgate Spreader Hopper Components							
Item	**Part**	**Qty**	**Description**	**Item**	**Part**	**Qty**	**Description**
1	75406	1	Hopper Kit, Yellow	5	75619	1	Receiver Kit
2	75572	1	Hopper Frame	6	75407	1	Top Screen Kit
3	75570	1	Hopper Support Kit	7	WSC-020	1	Weather Cover
4	75405	1	Hopper Support Frame Kit	8	75620	1	Hitch Pin Kit
Item 1			**75406 Hopper Kit, Yellow**				
		1	Hopper			2	5/16 Flat Washer SS
		2	5/16-18 x 3/4 Hex Cap Screw SS			2	5/16 Locknut SS
Item 3			**75570 Hopper Support Kit**				
		1	Backing Plate			4	5/16-18 Serrated Flange Nut
		4	5/16-18 x 1 Serrated Flange Hex Cap Screw SS				
Item 4			**75405 Hopper Support Frame Kit**				
		1	Hopper Support			6	5/16-18 Serrated Flange Nut
		6	5/16-18 x 1 Serrated Hex Cap Screw				
Item 5			**75619 Receiver Kit**				
		1	2" Receiver Utility Hitch			4	1/2-13 x 1-1/2 Hex Cap Screw G5
8	75620	1	5/8 x 5-1/2 Hitch Pin w/Hairpin Cotter				
Item 6			**75407 Top Screen Kit**				
		1	Top Screen, Utility			2	1/4 Flat Washer SS
		2	1/4-20 x 3/4 Serrated Flange Hex Cap Screw SS			2	1/4-20 Locknut SS
Item 7			**WSC-020 Weather Cover**				
		1	Weather Cover				
SS = Stainless Steel				G = Grade			

TS-300-1 & TS-300-EG-1 DRIVE COMPONENTS

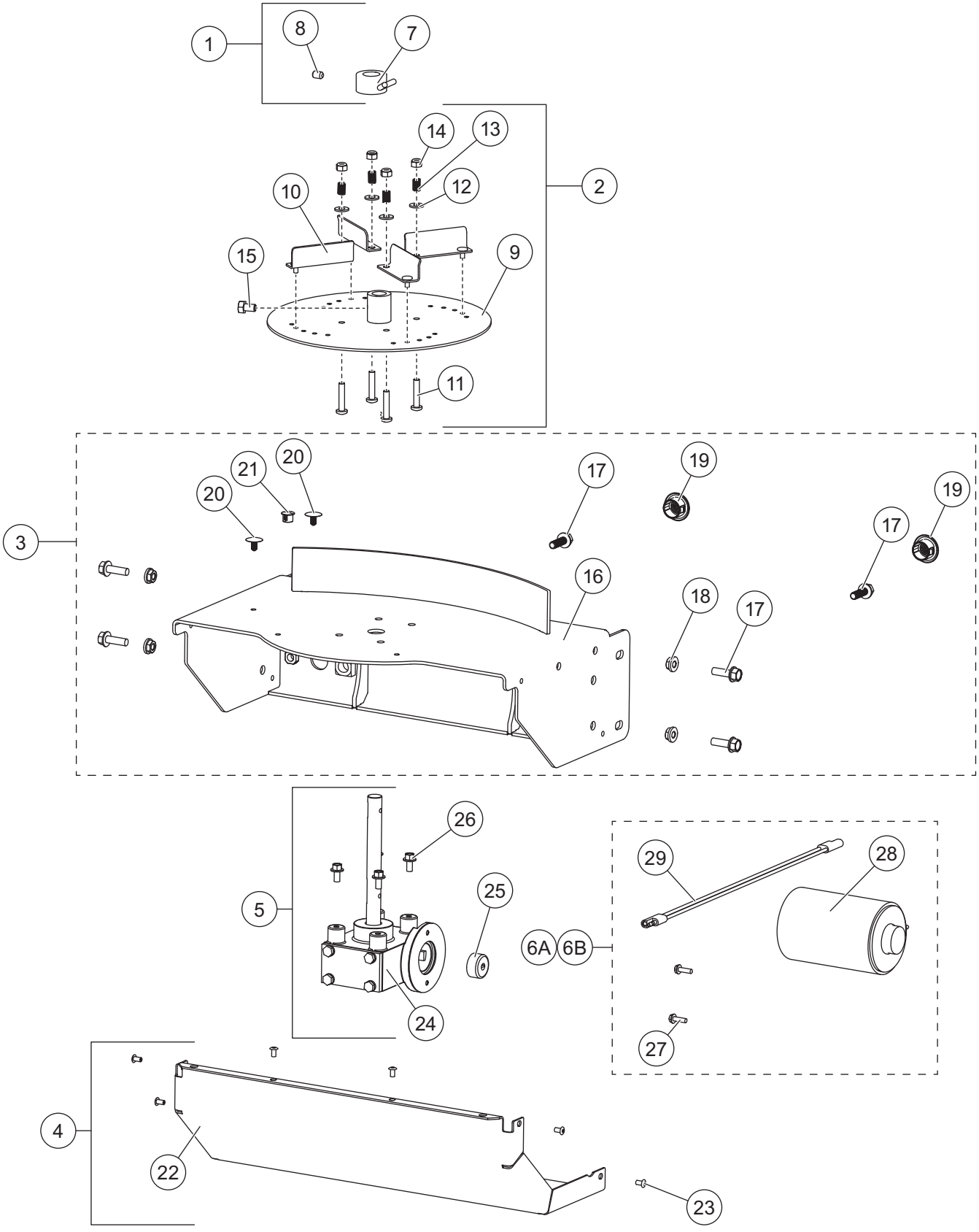

TS-300-1 & TS-300-EG-1 Drive Components							
Item	**Part**	**Qty**	**Description**	**Item**	**Part**	**Qty**	**Description**
1	75408	1	Agitator Kit	5	75625	1	Transmission Kit
2	75369	1	Adjustable Spinner Kit	6A	75417	1	Motor Kit, TS-300-EG-1
3	75628	1	Transmission Enclosure Kit	6B	75418	1	Motor Kit, TS-300-1
4	75624	1	Transmission Enclosure Cover Kit				
Item 1			**75408 Agitator Kit**				
7		1	Agitator	8		1	5/16-18 x 3/8 Set Screw
Item 2			**75369 Adjustable Spinner Kit**				
9	T15030	1	Adjustable Spinner Plate, 10"	13	T30217	4	Flite Spring
10	T15031	4	Spinner Flite, SS	14	T15016	4	1/4-20 Locknut SS
11	T30218	4	1/4-20 x 1-1/4 Phillips Pan Head SS	15	T15049	1	5/16-18 x 1/2 Hex Head Cap Screw SS
12	T15014	4	1/4 Flat Washer SS				
Item 3			**75628 Transmission Enclosure Kit**				
16		1	Transmission Mount	21		1	1/2 Cap Plug
17		6	5/16-18 x 1 Hex Cap Screw Serrated	ns	75623	1	Label – Warning, Read Manual
18		4	5/16-18 Serrated Flange Nut	ns	75621	1	Label – Warning, Moving Parts
19		2	Break-Thru Plug	ns	75622	1	Label – Warning, Maximum Weight
20		2	1/4 Retainer	ns	11100	1	Label – Warning, Rear Camera
Item 4			**75624 Transmission Enclosure Cover Kit**				
22		1	Transmission Enclosure Cover	23		6	3/16 x 0.354 Rivet
Item 5			**75625 Transmission Kit**				
24		1	Transmission 14.5:1	26		4	1/4-20 x 1/2 Serrated Flange SS
25		1	Motor Drive Coupler				
Item 6A			**75417 Motor Kit, TS-300-EG-1**				
27		2	#10-32 x 5/8 Serrated Hex Cap Screw	29		1	Motor Connector Adapter
28		1	3 x 3.8 12V DC Motor				
Item 6B			**75418 Motor Kit, TS-300-1**				
27		2	#10-32 x 5/8 Serrated Hex Cap Screw	29		1	Motor Connector Adapter
28		1	3 x 3.8 12V DC Motor				
ns = not shown				SS = Stainless Steel			

SIDE DEFLECTOR KIT

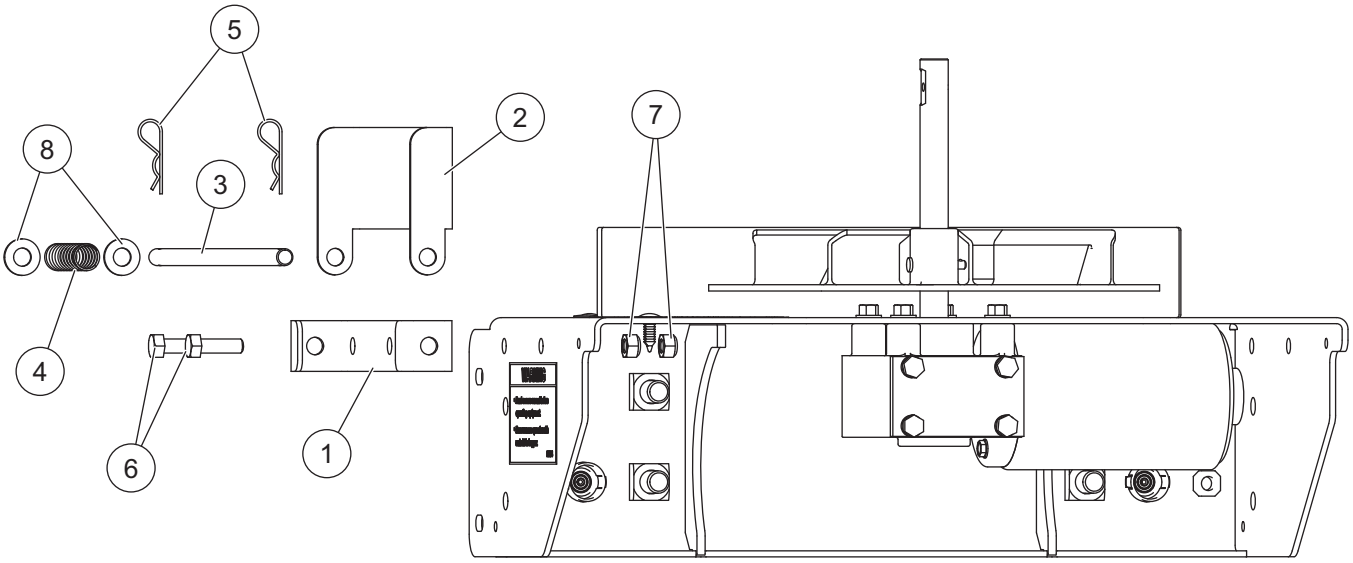

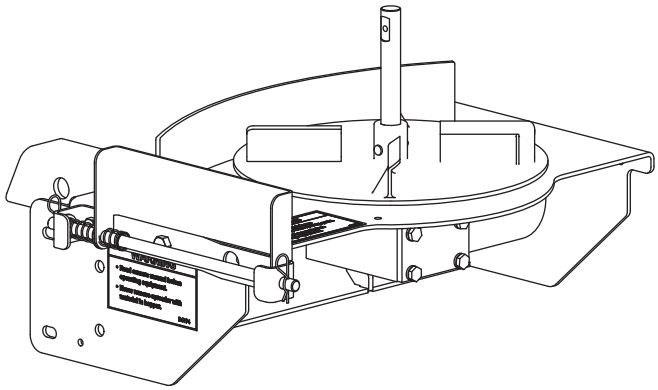

SDK-020 Side Deflector Kit							
Item	**Part**	**Qty**	**Description**	**Item**	**Part**	**Qty**	**Description**
1		1	Side Deflector Mount Bracket	5	D6853	2	Hairpin Cotter
2		1	Material Deflector	6	D6418	2	5/16-18 x 1 Hex Cap Screw SS
3		1	Side Deflector Hinge Rod	7	T15018	2	5/16-18 Locknut SS
4		1	Spring SS	8	D6169	2	3/8 Flat Washer SS
SS = Stainless Steel							

TS-300-1 MANUAL GATE

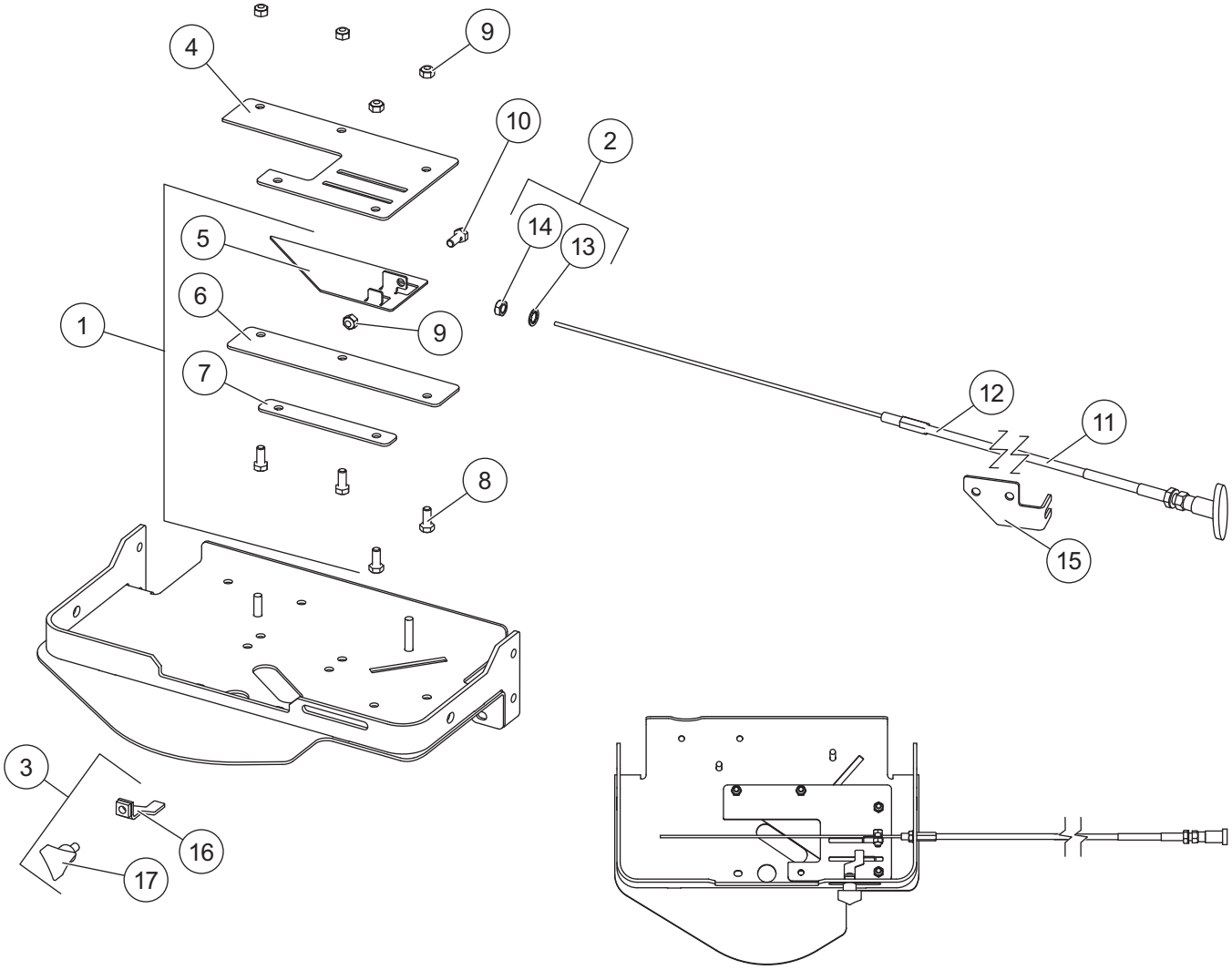

TS-300-1 Manual Gate Kit Components							
Item	**Part**	**Qty**	**Description**	**Item**	**Part**	**Qty**	**Description**
1	75409	1	Manual Gate Kit	3	75411	1	Gate Stop Indicator Kit
2	75368	1	T-Handle Cable Kit				
Item 1			**75409 Manual Gate Kit**				
4		1	Gate Track	8		4	5/16-18 x 3/4 Hex Cap Screw SS
5		1	Gate Slide	9		5	5/16-18 Locknut SS
6		1	Gate Track Spacer	10		1	5/16-18 x 3/4 Cap Screw w/Pilot Hole
7		1	Short Gate Track Spacer				
Item 2			**75368 T-Handle Cable Kit**				
11		1	9' T-Handle Cable	14		1	3/8-24 Hex Jam Nut
12		1	Bulkhead Cable Fitting	15	F50027	1	Cable Bracket
13		1	5/16 Star Lock Washer				
Item 3			**75411 Gate Stop Indicator Kit**				
16		1	Gate Stop Indicator	17		1	Triangle Knob
SS = Stainless Steel							

TS-300-EG-1 ELECTRIC GATE

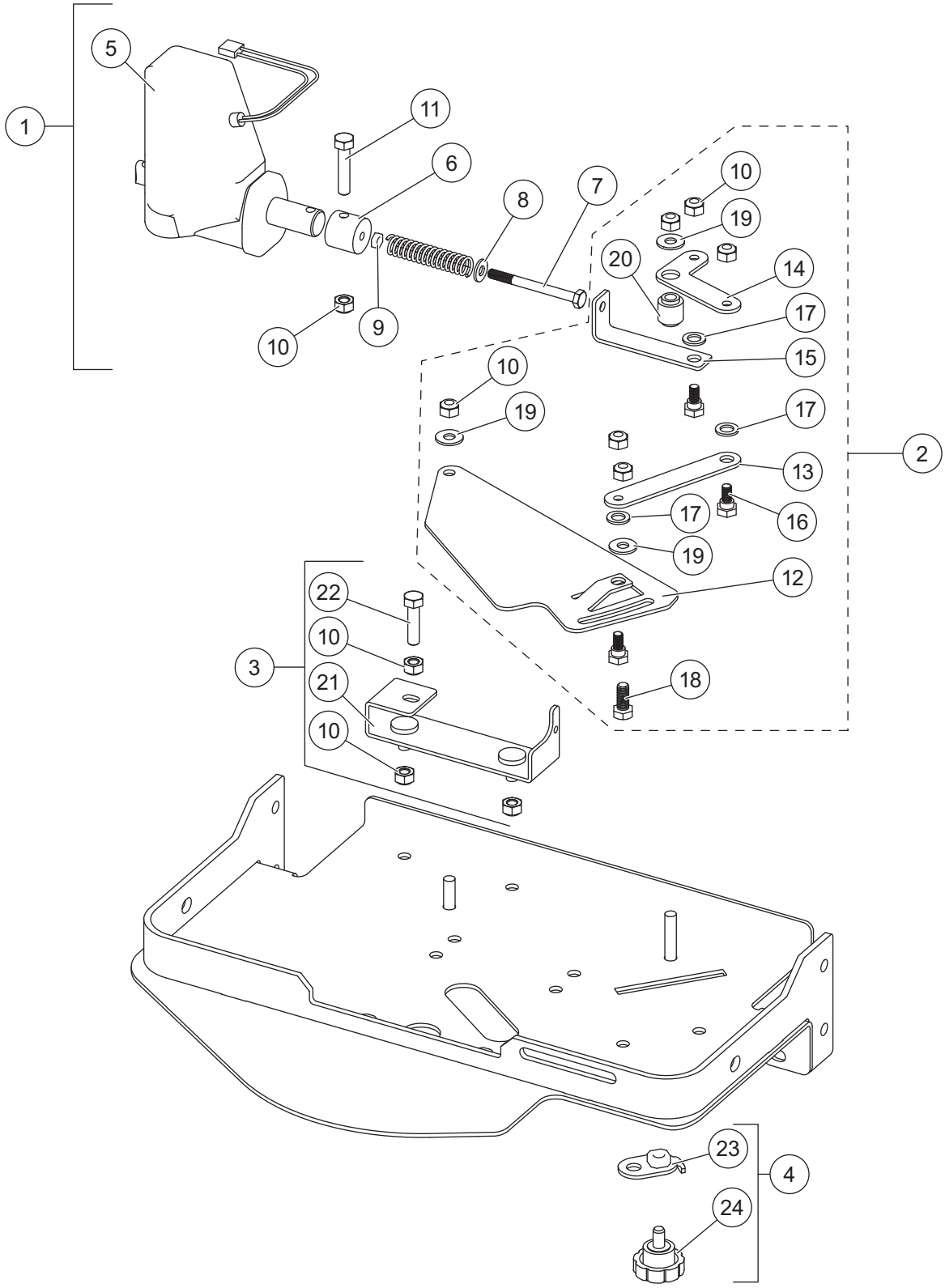

TS-300-EG-1 ELECTRIC GATE

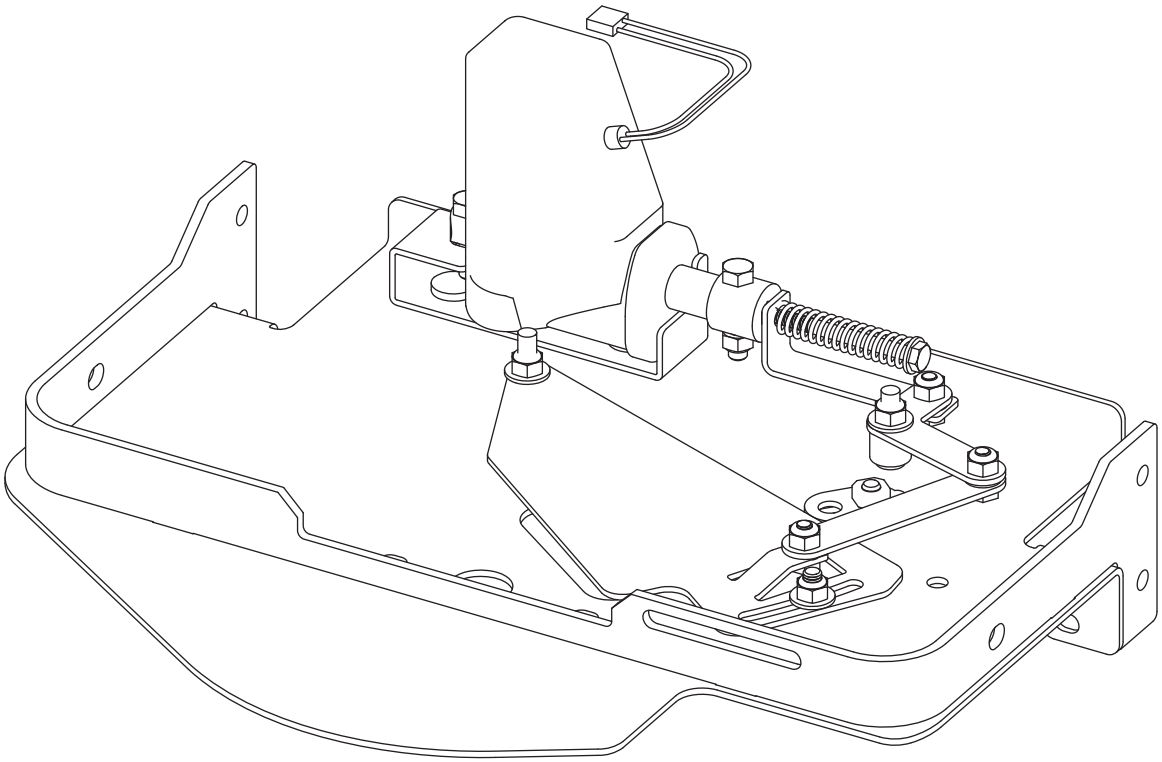

TS-300-EG-1 Electric Gate Kit Components							
Item	**Part**	**Qty**	**Description**	**Item**	**Part**	**Qty**	**Description**
1	75412	1	Actuator Assembly Kit	3	75414	1	Actuator Mount Kit
2	75413	1	Gate/Gate Linkage Kit	4	75415	1	Gate Slide Stop Kit
Item 1			**75412 Actuator Assembly Kit**				
5		1	Actuator Assembly	9		1	1/4-20 Jam Nut
6		1	Actuator Adapter	10		1	5/16-18 Locking Hex Nut SS
7		1	1/4-20 x 2-3/4 Hex Cap Screw	11		1	5/16-18 x 1-1/2 Hex Cap Screw SS
8		1	1/4 Flat Washer SS				
Item 2			**75413 Gate/Gate Linkage Kit**				
10		6	5/16-18 Locking Hex Nut SS	16		1	Gate Linkage Shoulder Bolt SS
12		1	Gate Slide	17		3	3/8 Nylon Flat Washer
13		1	Gate Slide Arm	18		1	5/16-18 x 3/4 Hex Head Cap Screw SS
14		1	Pivot Link Arm	19		3	1/4 Nylon Flat Washer
15		1	Actuator Link Arm	20		1	Gate Linkage Spacer
Item 3			**75414 Actuator Mount Kit**				
10		3	5/16-18 Locking Hex Nut SS	22		1	5/16-18 x 1-1/4 Hex Cap Screw SS
21		1	Actuator Mount Bracket				
Item 4			**75415 Gate Slide Stop Kit**				
23		1	Gate Slide Stop	24		1	Round Knob
SS = Stainless Steel							

MODEL TS-300-1 SPREADER CONTROL HARNESS KIT

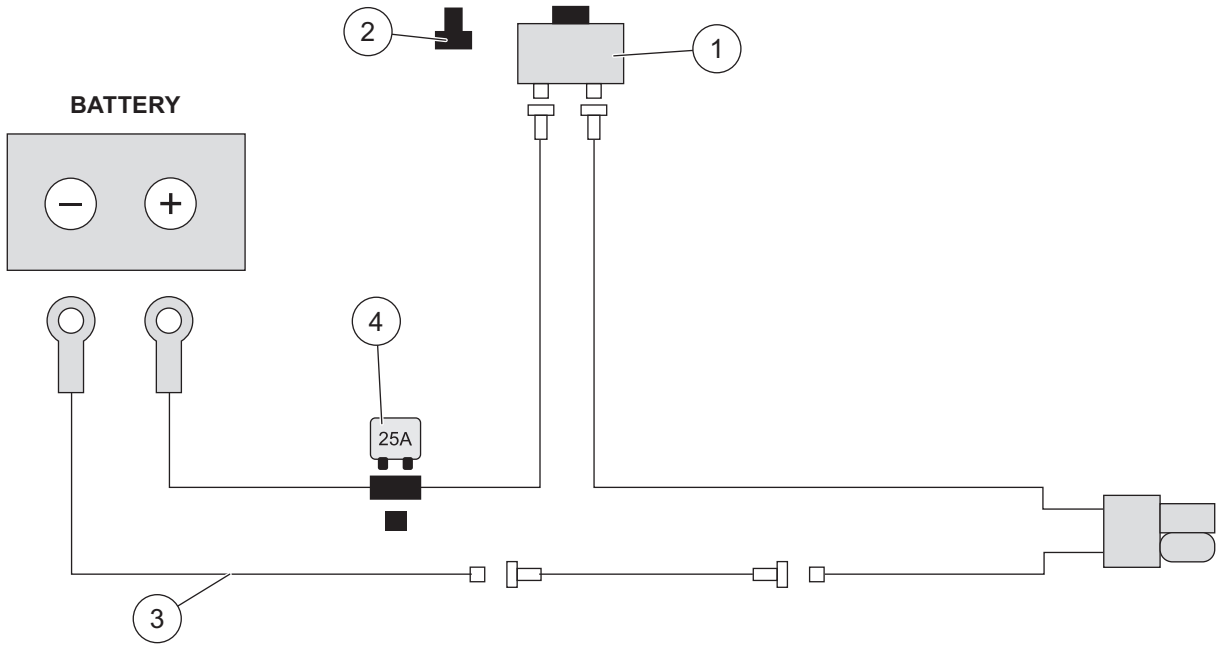

75424 Spreader Control Harness Kit							
Item	**Part**	**Qty**	**Description**	**Item**	**Part**	**Qty**	**Description**
1		1	ON/OFF Switch	3		1	Wiring Harness
2		1	Rubber Switch Boot	4		1	25A Breaker

TS-300-EG-1 ELECTRICAL COMPONENTS

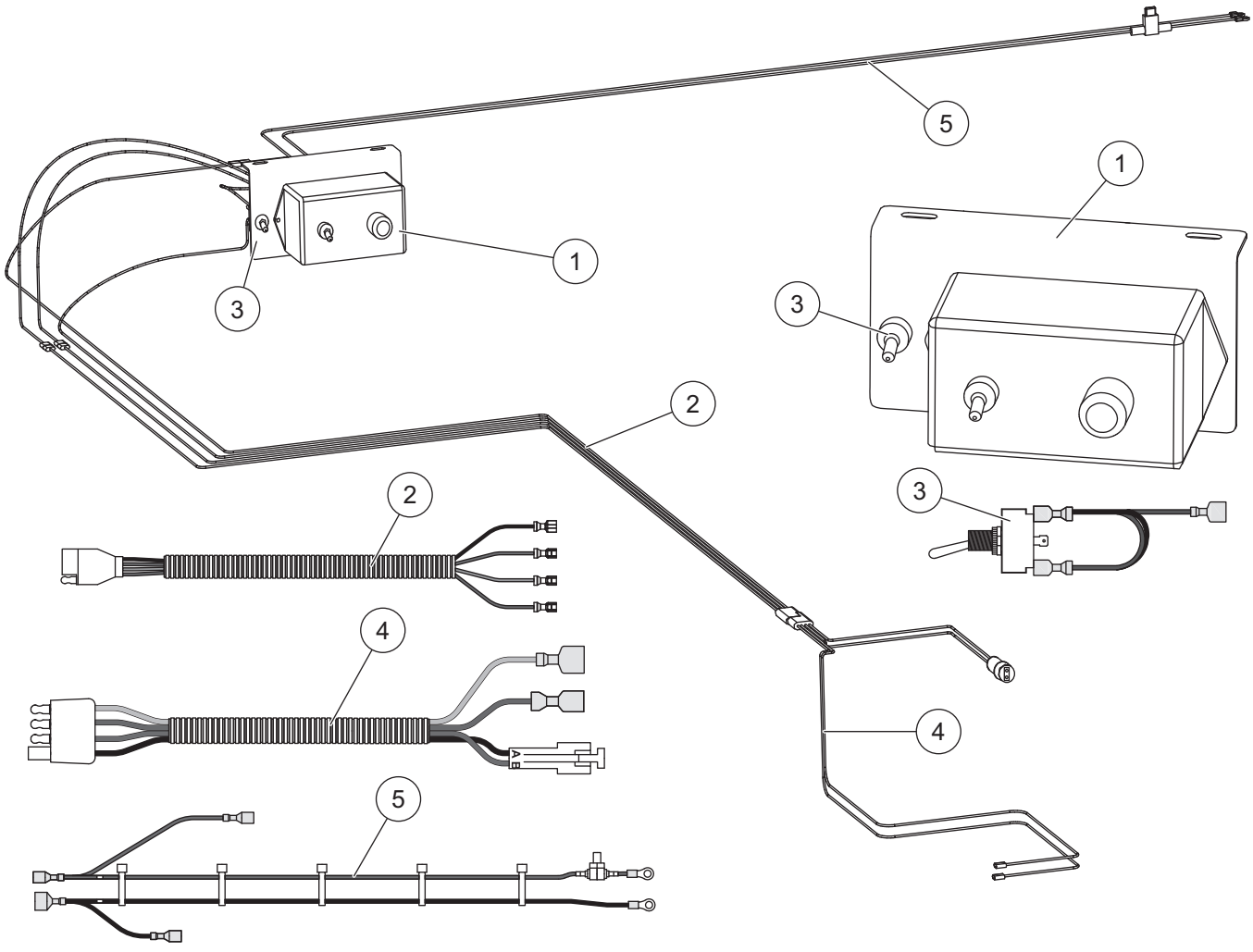

Electrical Components							
Item	Part	Qty	Description	Item	Part	Qty	Description
1	75419	1	Spreader Control	4	75422	1	Spreader Harness
2	75420	1	Vehicle Harness	5	75423	1	Control Power Cable
3	75421	1	Switch Assembly				

TrynEx International
531 Ajax Drive
Madison Heights, MI 48071-2429
www.turfexproducts.com

A DIVISION OF DOUGLAS DYNAMICS, LLC

Copyright © 2018 Douglas Dynamics, LLC. All rights reserved. This material may not be reproduced or copied, in whole or in part, in any printed, mechanical, electronic, film, or other distribution and storage media, without the written consent of TrynEx International, LLC. Authorization to photocopy items for internal or personal use by TrynEx International outlets or spreader owner is granted.

TrynEx International reserves the right under its product improvement policy to change construction or design details and furnish equipment when so altered without reference to illustrations or specifications used. TrynEx International or the vehicle manufacturer may require or recommend optional equipment for spreaders. Do not exceed vehicle ratings with a spreader. TrynEx International offers a limited warranty for all spreaders and accessories. See separately printed page for this important information. The following are registered (®) trademarks of Douglas Dynamics, LLC: TurfEx®.

Printed in U.S.A.